KOHL'S

# APPAREL CONSTRUCTION REQUIREMENTS
## GENERAL KNIT & WOVEN APPAREL
### PRIVATE & EXCLUSIVE BRANDS APPAREL

**All Private and Exclusive brands must follow these requirements unless otherwise specified in the TP.**


CONFIDENTIALITY NOTICE: This document is property of Kohl's Inc.

Revised Date: 10/23/2026

# APPAREL CONSTRUCTION REQUIREMENTS
## PRIVATE & EXCLUSIVE BRANDS APPAREL

## TABLE OF CONTENTS

### APPAREL CONSTRUCTION REQUIREMENTS


SECTION 1: THREAD REQUIREMENTS.....PG 3
KNIT THREAD REQUIREMENTS.....PG 3
WOVEN THREAD REQUIREMENTS.....PG 4

SECTION 2: SPI REQUIREMENTS.....PG 6
KNIT SPI REQUIREMENTS.....PG 6
WOVEN SPI REQUIREMENTS.....PG 7

SECTION 3: SEAM REQUIREMENTS.....PG 8

SECTION 4: CONSTRUCTION REQUIREMENTS.....PG 12

SECTION 5: TRIMS/FINDINGS.....PG 22

SECTION 6: CUTTING…….....…....PG 30


Revised Date: 10/23/2026



CONFIDENTIALITY NOTICE: This document is property of Kohl's Inc.

## SECTION 1:
## KNIT THREAD REQUIREMENTS

**Needle/Bobbin Thread Quality:**

- **Non garment wash/garment wash for softness/shrinkage only/ fabric wash:** Spun Polyester
- **Chemical or abrasive garment wash for appearance/color change:** Poly Wrap/Poly Core (unless Cotton Wrap/Poly Core is specified for wash down appearance)
- **Looper Thread Quality:** Spun Polyester or Texturized Polyester
  Minimum thread size given - size up to next Tex size if not available for thread quality required.

| Needle/Bobbin Thread Size: | Looper Thread Size: |
|---|---|
| 70 - 200g/m2 = Tex 21 | Tex 18 |
| 140 - 270g/m2 = Tex 27* | Tex 21 |
| 270 - 340g/m2 = Tex 40 | Tex 27 Spun Poly* |
| 270 - 340g/m2 = Tex 40 | Tex 35 Textured Poly |

**Tex 24 is acceptable if using Poly Wrap/Poly Core Thread*

**Tight fitting garments designed for Power Stretch, Compression, or with >7% Spandex:**

- Needle/Bobbin = Poly Wrap/Poly Core, Tex 24
- Looper = Texturized Poly, Tex 24

**Internal Thread Color:**

- Must be DTM ground unless otherwise specified.
- Contrast color is subject to Design approval.

**Sewn-on Metal Trims (buttons, snaps, hook/eye):** Poly Wrap/Poly Core. Must use lock stitch if machine sewn.

**Beading/Sequins:** Poly Wrap/Poly Core. Tex size as specified.

**Buttonhole Thread:** Required on all functional knit plackets.

- Needle/Bobbin = Poly Wrap/Poly core, Tex 24

**Shank Button Sew Thread Quality:**

- 70 - 200m/g2: Poly Wrap/Poly Core, Tex 24-30
- 200 - 340m/g2: Poly Wrap/Poly Core, Tex 40


CONFIDENTIALITY NOTICE: This document is property of Kohl's Inc.

# SECTION 1:
# WOVEN THREAD REQUIREMENTS

**Needle/Bobbin Thread Quality:**

- **Non garment wash/garment wash for softness/shrinkage only/ fabric wash:** Spun Polyester
- **Chemical or abrasive garment wash for appearance/color change:** Poly Wrap/Poly Core (unless Cotton Wrap/Poly Core is specified for wash down appearance)
- **Looper Thread Quality:** Spun Polyester or Texturized Polyester
  Minimum thread size given - size up to next Tex size if not available for thread quality required.

| Needle/Bobbin Thread Size: | Looper Thread Size: |
|---|---|
| 2 - 4oz = Tex 18 | Tex 18 |
| 4 - 6oz = Tex 21 (Spun) | Tex 18 |
| 4 - 6oz = Tex 24 (Core) | Tex 18 |
| 6 - 8oz = Tex 27* (Spun) | Tex 21 |
| 6 - 8oz = Tex 30 (Core) | Tex 24 |
| 8 - 10oz = Tex 40 | Tex 30 |
| 10 - 14oz = Tex 60 | Tex 40 |

Maximum Bobbin size = Tex 80 for Needle Thread Tex>80.

**Tex 24 is acceptable if using Poly Wrap/Poly Core Thread*

**Men's Casual Shirts:**

- Needle/Bobbin = Spun Polyester Tex 24
- Looper = Texturized Spun Poly Tex 18
- No thread breaks/repairs allowed on collar, front placket, pocket set, sleeve placket or sleeve cuffs. Splicing in other external areas must be inconspicuous and must not affect the structural integrity of the garment.

**Denim/Twill Corduroy - Light to medium wash process (Bottom Weight 8-14 oz):**

- Needle/Bobbin = **Spun Polyester or Cotton Wrap/Poly core** (if required for garment wash appearance), Tex 60 (Corduroy = Tex 40)
- Looper = Spun Polyester, Tex 40

**Denim/Twill/Corduroy - Aggressive wash process (Bottom Weight 8-14 oz):**

- Needle/Bobbin = **Poly Wrap/Poly Core or Cotton Wrap/Poly Core** (if required for garment wash appearance), Tex 60 (Corduroy = Tex 40)
- Looper = Spun Polyester, Tex 40

**Internal Thread Color:**

- Must be DTM ground unless otherwise specified.
- Contrast color is subject to Design approval.


CONFIDENTIALITY NOTICE: This document is property of Kohl's Inc.

## SECTION 1:
## WOVEN THREAD REQUIREMENTS (CONT'D)

**Sewn-on Metal Trims (buttons, snaps, hook/eye):** Poly Wrap/Poly Core. Must use lock stitch if machine sewn.

**Beading/Sequins:** Poly Wrap/Poly Core. Tex size as specified.

**Shank Button Sew Thread Quality:**

- Blouses: Poly Wrap/Poly Core, Tex 24-30

**Buttonhole Gimp:** Required on keyhole button holes.

- Must be gimp cord, not sewing thread. Tex 180 or Tex 210 depending on fabric weight.


CONFIDENTIALITY NOTICE: This document is property of Kohl's Inc.

## SECTION 2:
## KNIT SPI REQUIREMENTS

**General Sewing** = 10-12 SPI

**Neck openings, empire seams, hems that fit tight against body/ dressform** = 12-14 SPI

**Tight fitting garments designed for Power Stretch, Compression, or >7% Spandex** = 14-16 SPI

**Elastic Openings** = 16-18 SPI (elastic relaxed)

Ball point needles only.

**Multiple needle topstitching:** must be parallel unless otherwise specified. Example: 2N pocket set - no cross over of inside stitchline allowed at corners.

## SECTION 2:
## WOVEN SPI REQUIREMENTS

**General Woven Apparel** = 10-12 SPI

**Men's Shirts** = 12-14 SPI

**Denim/Twill/Corduroy, Stretch Fabric Waistbands** = 8-10 SPI

**Functional Welt Pockets Basting Stitch** = 5-6 SPI (IMAGE 1.1)

- Machine baste closed at center w/ no autolock stitch. Leave a minimum of 1" open on each end.

**Multiple needle topstitching:** must be parallel unless otherwise specified. Example: 2N pocket set - no cross over of inside stitchline allowed at corners.

**IMAGE 1.1: FUNCTIONAL WELT POCKET BASTING STITCH**

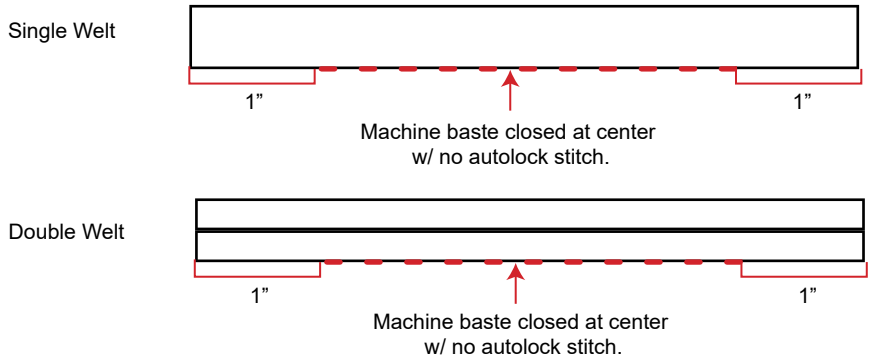

## SECTION 3: SEAM REQUIREMENTS

### GENERAL APPAREL WOVEN & KNIT:

- No raw edges, open or twisted seams.
- Stitches must be secured at start and stop with 3-4 back tack or overlap stitch by 1/2".
- Ends of overedge seams must be SN tacked or have self-latched thread end. (IMAGE 1)
- No thread breaks/repairs allowed on collar, front placket, pocket set, sleeve placket or sleeve cuffs. Splicing in other areas must be inconspicuous and not affect the structural integrity of the garment.
- No seams in binding or taping within neck seam or sleeve opening. Splicing in other external areas must be inconspicuous and should not fall at CF or near neck opening of garment.
- **Bonded Seams:** Bonding substrates must be sourced from a Kohl's preferred supplier, contact preferred supplier to verify fabric compatibility with bonding material before costing. All Bonded seams must be applied and tested throughout production according to bonded film suppliers specifications.
- **Crotch Point:** If inseam is not flat felled or topstitched, crotch point must have a bartack reinforcement inside seam allowance at the back panel. (IMAGE 2)

**IMAGE 1: OVEREDGE SEAMS - END FINISHING**

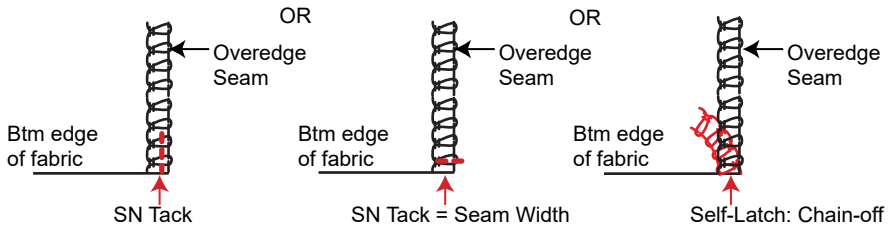


OVEREDGE SEAM CONSTRUCTION:
Overedge - ISO 503, 504, 505, 514
Mock-Safety Stitch - ISO 512
Safety Stitch - ISO 515, 516

**IMAGE 2: CROTCH POINT REINFORCEMENT**

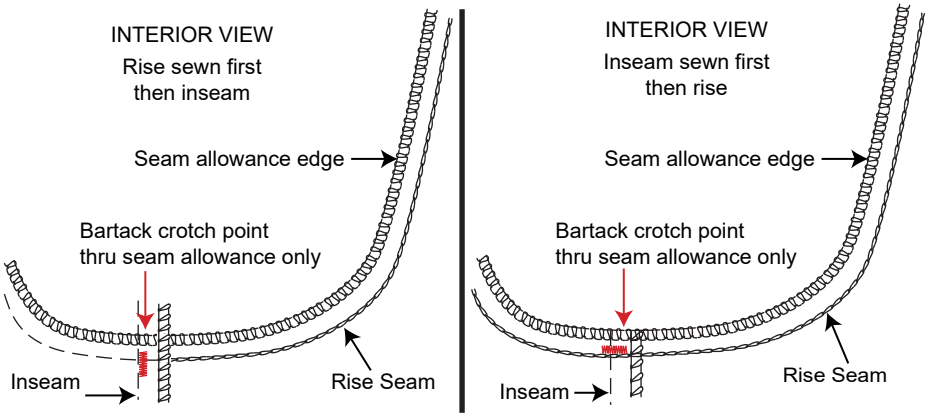



CONFIDENTIALITY NOTICE: This document is property of Kohl's Inc.

## MINIMUM SEAM ALLOWANCE WOVEN & KNIT:

- Seams must pass Kohl's seam slippage and strength requirements.
- (KNIT) 2N Coverseam Hemming ISO 406/602/605: All needles through both plies of fabric. 1/16" raw edge margin for most light to medium weight fabrics. Heavy pile/plush fabrics may require 1/8" raw edge margin. Sewing Defect >3/16" (IMAGE 3.1)
- **High Pile:** Internal seams must use ISO 516 seam join, with 1/2" gauge. (IMAGE 3.2)
- Sandwiched seam allowance without pre-finished edges (ex: Waistbands, Yokes, Cuffs, Plackets):
  Tightly knit/woven fabrics = 1/4"
  Loosely knit/woven fabrics = 3/8"

### IMAGE 3.1: 2N/3N KNIT COVERSEAM HEMMING

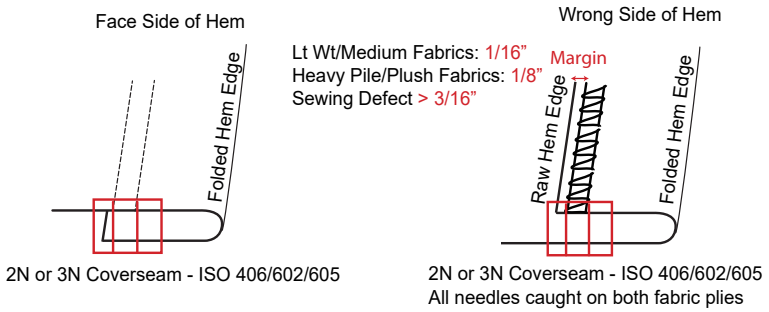


2N or 3N Coverseam - ISO 406/602/605

2N or 3N Coverseam - ISO 406/602/605
All needles caught on both fabric plies

### IMAGE 3.2: HIGH PILE SEAM REQUIREMENTS

Internal seams must use ISO 516, 1/2" gauge.

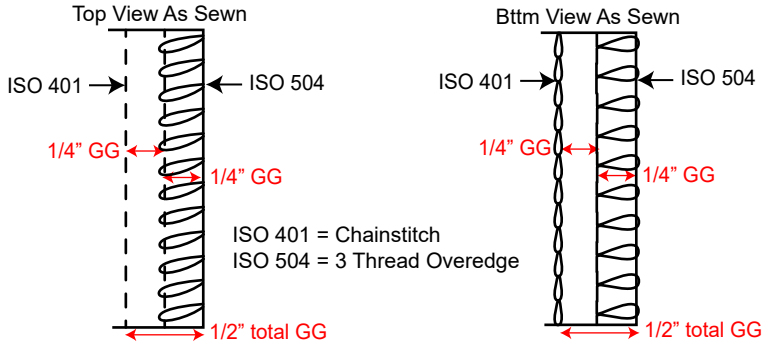



CONFIDENTIALITY NOTICE: This document is property of Kohl's Inc.

## SEAM REQUIREMENTS CONT.

### ADDITIONAL WOVEN:

- **General Seams**: 5 Thread Safety Stitch (ISO 516). (IMAGE 4.1) All other seams must be finished with (ISO 503) or (ISO 504) overedge. This includes unlined and/or lined garments (both outershell and lining)

- Use **Pinch Seaming** or **Half Pinch Seaming** to reinforce seams on fabrics with low seam slippage or low thread count.

  **Pinched Seaming:** (IMAGE 4.2) Use when top stitching cannot be applied due to construction limitations or is not desired for aestheic reasons.

  **Half Pinch Seaming:** (IMAGE 4.3) Use when top stitching is needed on exterior to further pass seam slippage testing or desired for aesthetic reasons.

- **Tops:** Underarm/Side seam when topstitch is specified, topstitch is towards the front of the garment.

- **Bottoms:**

  **Inseam:** 5 Thread Safety Stitch (ISO 516). When topstitch is specified, topstitch is on front of garment.

  **Outseam:** 5 Thread Safety Stitch (ISO 516) with cording/SN lockstitch (ISO 301) on back. All other topstitching to be SN chainstitch (ISO 401).

  **Front Rise:** Join seam together with lockstitch (ISO 301). Edges are finished together with overedge (ISO 503 or 504). Topstitching as specified. Join seam must extend 3/4" past bottom edge of fly facing.

  **Back Rise:** 5 Thread Safety Stitch (ISO 516). Topstitching as specified = chainstitch (ISO 401).

### IMAGE 4.1: WOVEN GENERAL SEAMING - ISO 516

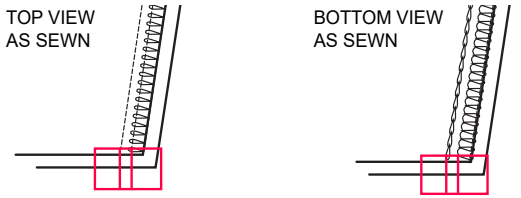


ISO 516 = 5 Thread Safety Stitch
Combination stitch consisting of a single-needle chainstitch (401) and a 3-thread overedge stitch (504) that are formed simultaneously.

### IMAGE 4.2: WOVEN PINCH SEAMING

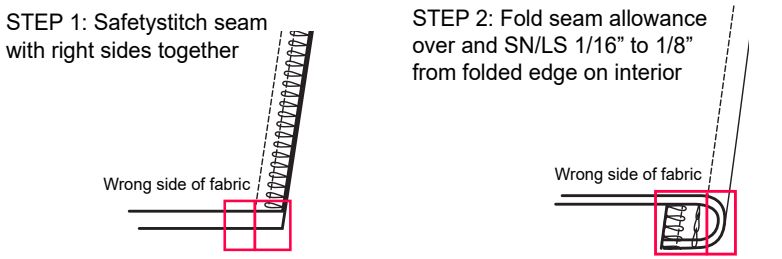


* No topstitch visible on exterior seam (right side of fabric)

### IMAGE 4.3: WOVEN HALF PINCH SEAMING

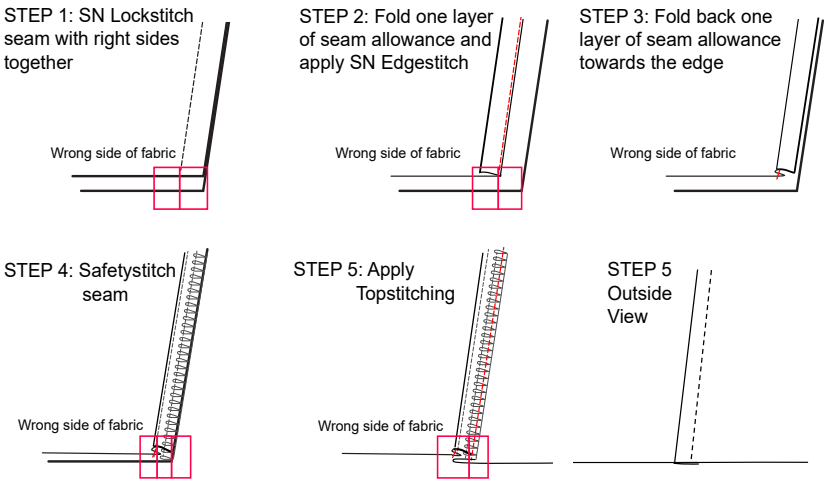


Revised Date: 10/23/2026


CONFIDENTIALITY NOTICE: This document is property of Kohl's Inc.

## SEAM REQUIREMENTS CONT.

### ADDITIONAL KNIT:

- General Seams: Mock Safety Stitch (ISO 512) or 2N 4 Thread Overedge (ISO 514)
- Flatseam (ISO 605 or ISO 607) fabric must be caught in 2 needles; required for compression or tight fitting garments. (IMAGE 5)

**IMAGE 5: FLATLOCK SEAM REQUIREMENTS**

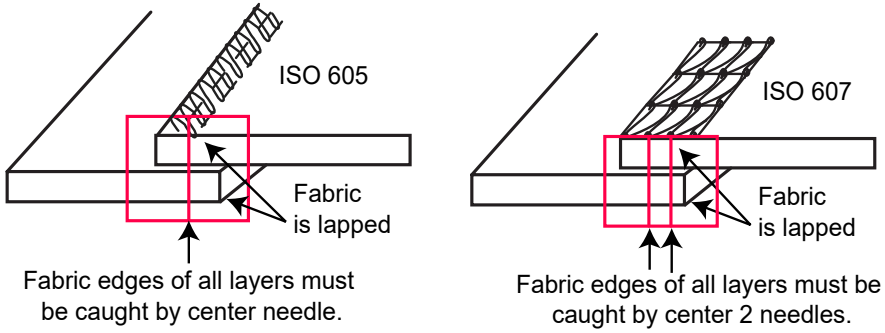


FLATLOCK STITCHES:
ISO 605 = 3 Needle/5 Thread Coverstitch
ISO 607 = 4 Needle/6 Thread Coverstitch


CONFIDENTIALITY NOTICE: This document is property of Kohl's Inc.

## SECTION 4: CONSTRUCTION REQUIREMENTS

### GENERAL APPAREL WOVEN & KNIT:

### NECKLINE/PLACKET/SHOULDER/SIDE SEAMS:

- **Bound necklines** to close at wearer's left shoulder.
- **Bound finished & flat hems** must be line tacked towards the back. Tack length = binding width. (IMAGE 6)
- **Binding/taping ends** must be tucked under and have 2-3 stitch back-tack. Seam must be entirely covered by taping/binding and not visible along edges. (IMAGE 7)
- **Placket closure: Men's & Boy's** overlap wearer's left over right. **Women's & Girl's** overlap wearer's right over left.
- **Children's Zip Plackets** - refer to Kohl's safety requirements for facing between zipper teeth and body.

### ADDITIONAL WOVEN:

- Collar, necklines, plackets, and cuffs must be clean finished.

### ADDITIONAL KNIT:

- Shoulder seams must be reinforced with clear elastic tape and set to the back seam allowance.

**IMAGE 6: BOUND FINISHES/FLAT HEMS**

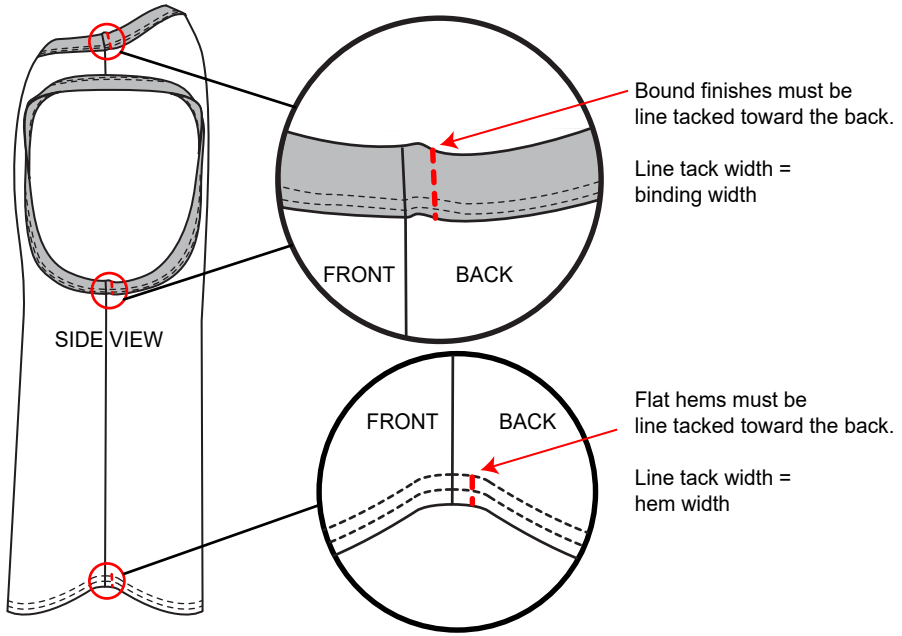


**IMAGE 7: BINDING/TAPING - FINISHING**

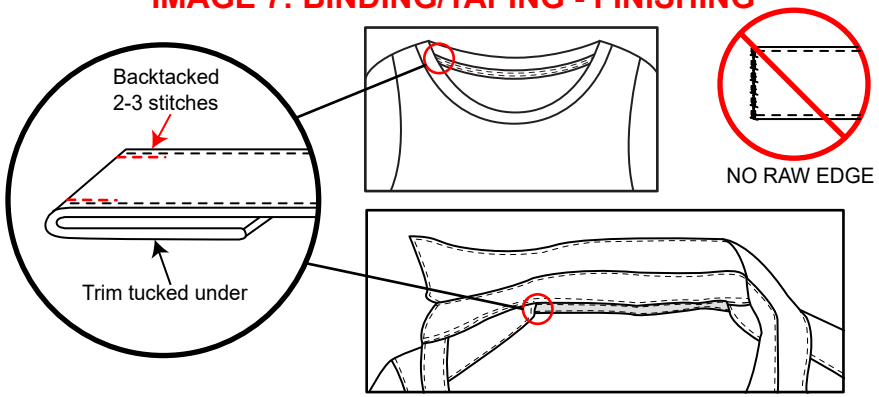

## CONSTRUCTION REQUIREMENTS CONT.

### SLEEVE/BOTTOM HEM:

- Hems must be circular finished unless otherwise specified.
- Blind hems can be 2 thread overedge (ISO 503) or single thread blindstitch (ISO 103).
- Rib trim seam must align with body seam. (IMAGE 8, #1) Rib should be circular set unless rib trim height is too wide (IMAGE 8, #2) OR sleeve opening is too small to allow for circular construction. (IMAGE 8, #3) When set circular: needs to be clean finished. Non-circular seam allowance tacked to the back.

### IMAGE 8: VIEW RIB TRIM SEAM/FINISHING

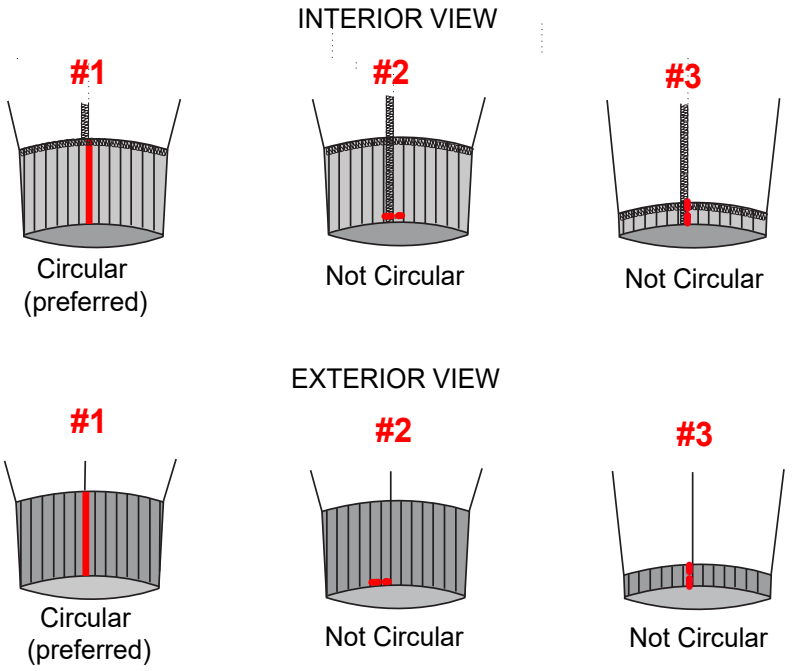



CONFIDENTIALITY NOTICE: This document is property of Kohl's Inc.

## CONSTRUCTION REQUIREMENTS CONT.

### SLEEVE/BOTTOM HEM (CONT.):

- Vents/slits must be clean finished and reinforced at top of vent with visible bartack OR hidden line tack as specified. (IMAGE 9)
- Binding or taping must be a continuous piece at sleeve opening and neck seam.
- Raw edge hems at side/underarm seams must be tacked or backstitched at bottom of raw edge so stitching cannot unravel. (IMAGE 10). Intentional raw edge finishes must be tacked or back-stitched at edge so stitching cannot unravel.

**IMAGE 9: VENTS/SLITS FINISHING**

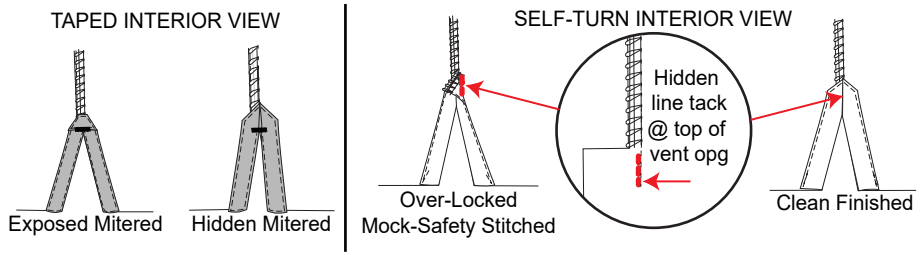


**IMAGE 10: RAW EDGE HEMS - SIDE SEAM FINISHING**

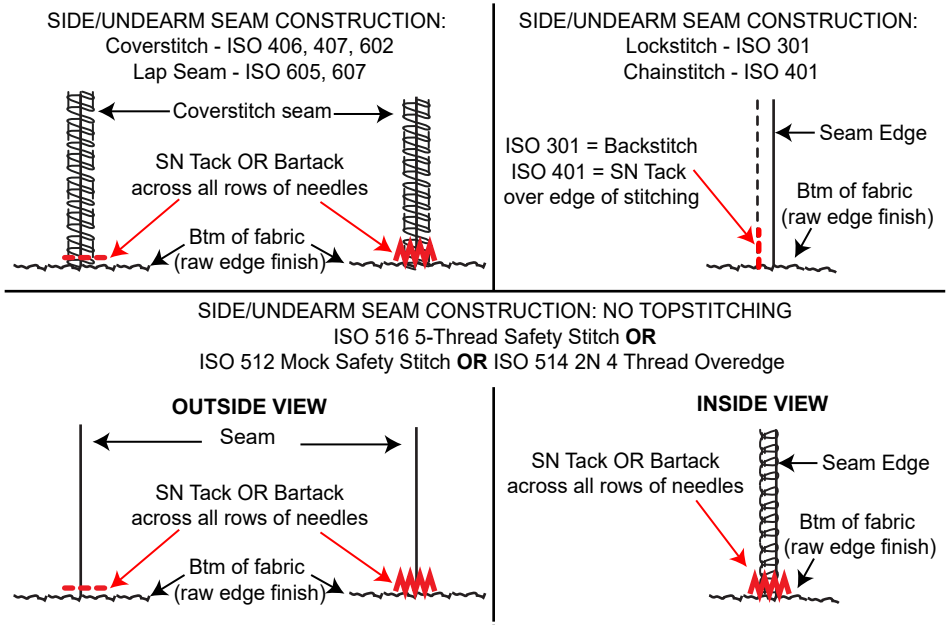


Revised Date: 10/23/2026


CONFIDENTIALITY NOTICE: This document is property of Kohl's Inc.

# CONSTRUCTION REQUIREMENTS CONT.

## ADDITIONAL WOVEN SLEEVE/BOTTOM HEM:

- Hem openings must be clean finished with lockstitch (unless otherwise specified) and lay flat with no roping or puckering.
- Hem 1/2” or less in height must have full hem height double turned.

## ADDITIONAL KNIT SLEEVE/BOTTOM HEM:

- Coverstitch/Coverseam circular hem must overlap 1/2” at side/undearm seam location with SN line tack sewn over side/underarm seam securing all thread ends.
  Line tack width = topstitch width. (IMAGE 11)

**IMAGE 11: CIRCULAR HEM TACK**

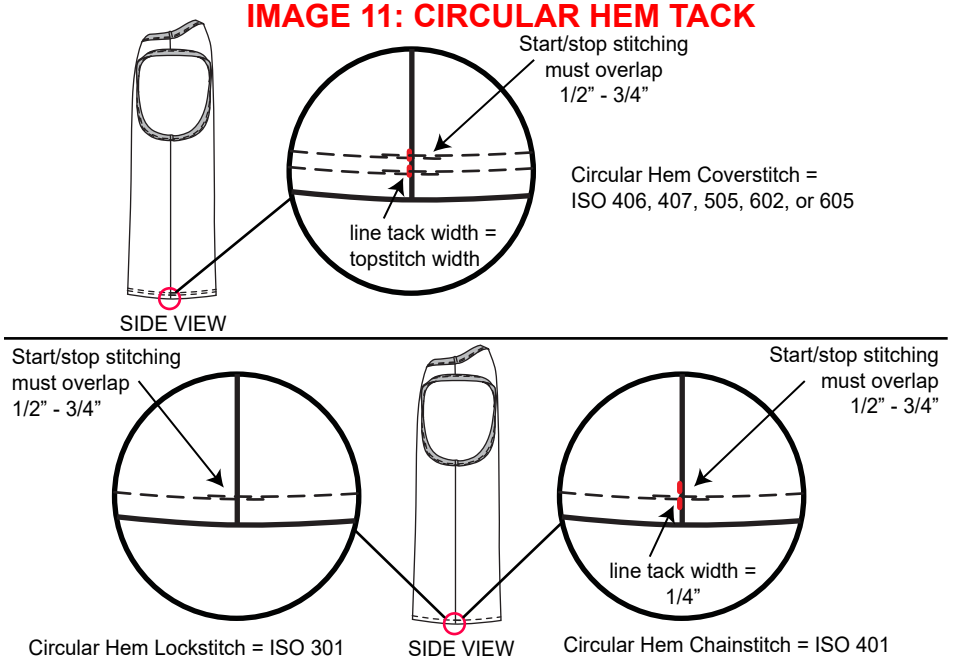

## CONSTRUCTION REQUIREMENTS CONT.

### POCKETS:

- **Pocket openings** must be reinforced as specified. This also includes welted/exposed zipper pocket openings (IMAGE 12)
- **Pocketing and pocket bags** must not have raw edges.
- **Welt Pocket Openings:** Double Pocket Welts should not overlap each other.
- **Pocket Bags** If pocket bag is mesh or is not DTM to body fabric, then pocket opening must be faced with body or other non-mesh/ DTM fabric.

**IMAGE 12: POCKET OPENING REINFORCEMENT**

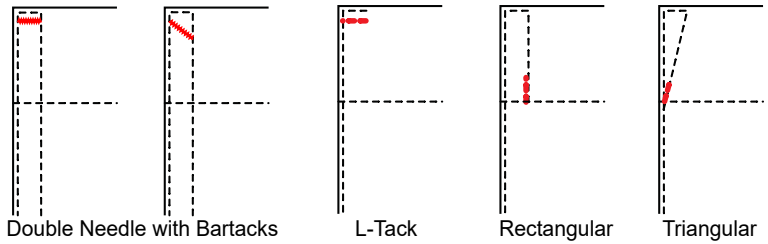


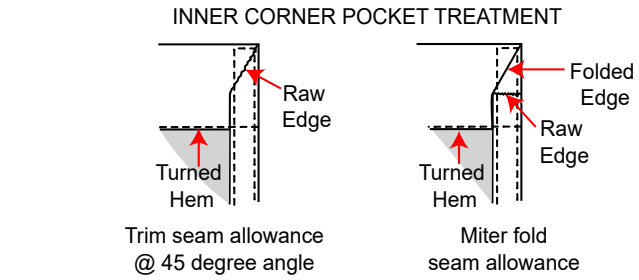


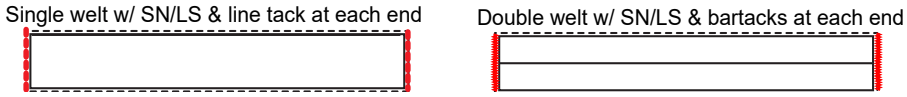



CONFIDENTIALITY NOTICE: This document is property of Kohl's Inc.

## CONSTRUCTION REQUIREMENTS CONT.

### STYLING FEATURES WOVEN & KNIT:

- **Shirring/Gathering** must be evenly distributed.
- **Darts** - End of darts need to be smooth, no dimples.
- **Elastic cut ends** should be stitched with chainstitch (ISO 401) to prevent unraveling.
- **Heat cut edges** must be clean finished so heat cut edges are not against the skin. Fold cut end under and stitch OR insert into binding seam. (IMAGE 13)
- **Adjustable straps** must be line tacked or bartacked at O-rings & slider using a 28-stitch tacking machine. Sewing tacks on SN lock-stitch machine is not acceptable tacking method. Image is for reference only. (IMAGE 13)
- **Two-fer styles with camisoles** - camisole must be attached to shell at shoulder seam with thread chain loop or clear stretch tape as specified. (IMAGE 14)

### ADDITIONAL WOVEN STYLING FEATURES:

- **Piping on jackets/light weight fabrics** - use untwisted cording and should be bias cut unless otherwise specified..

### IMAGE 13: ADJUSTABLE STRAPS - TACKING

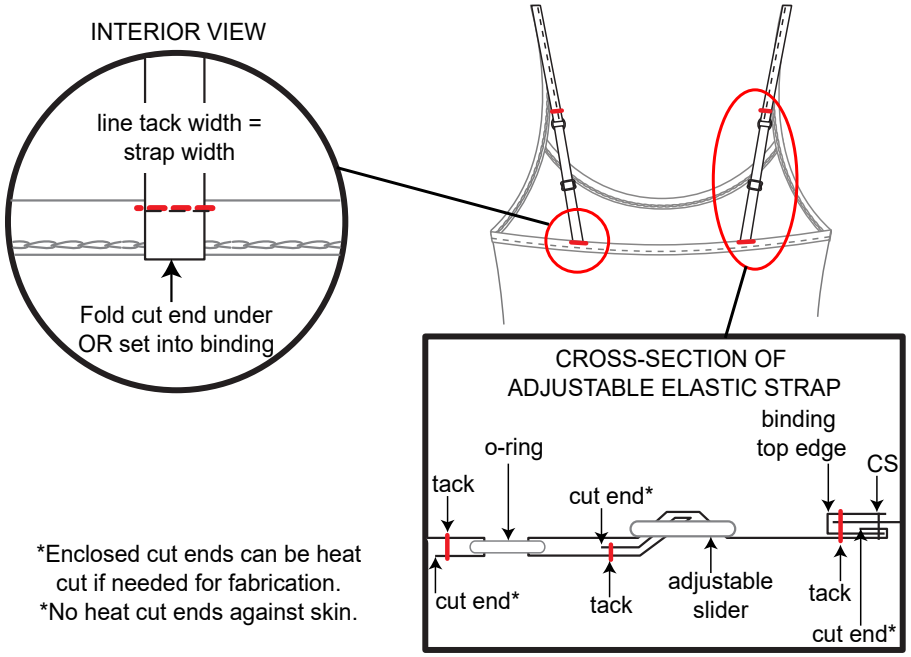


*Enclosed cut ends can be heat cut if needed for fabrication.
*No heat cut ends against skin.

### IMAGE 14: CAMISOLE ATTACHMENT TO SHELL

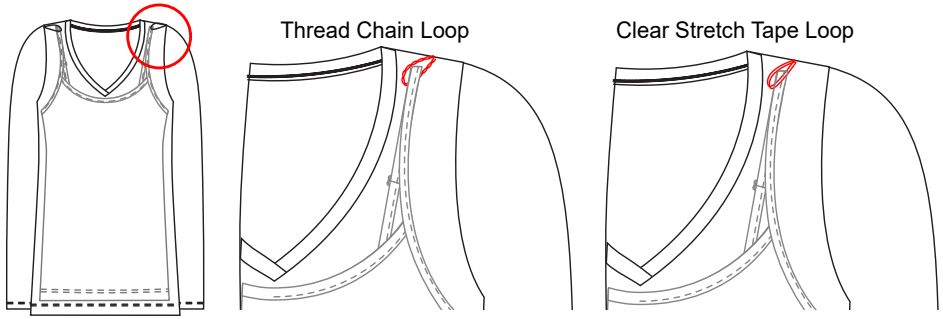

## CONSTRUCTION REQUIREMENTS CONT.

### FLY:

- **Men's/Children's/Women's Casual Closure:** Overlap wearer's left over right.
- **Zipper Fly, Bartack/Line Tack Reinforcement:** Place side bartack reinforcement even with top of zipper slider when fly is fully unzipped. If styling requires no exterior bartack shown, then set bartack reinforcement through fly facings on inside and exterior bartack is decorative (set through outside) only. (IMAGE 15)
- **Cording/lockstitch** required to reinforce fly/zipper tape. (IMAGE 16)
- **Zipper gap:** No more than 1/8" gap allowed between bottom of waistband and top zipper stop. No more than 1/4" allowed between bottom of J-stitch zipper stop. (IMAGE 16)

### BELT LOOPS WOVEN & KNIT:

- **Folder Stitched:** Use 2N/Bottom coverstitch (ISO 406) to finish back of belt loop or clean finished as specified.
- **Bartacks or line tacks** to secure top and bottom of loop or as specified.

**IMAGE 15: FLY SIDE TACK REINFORCEMENT**

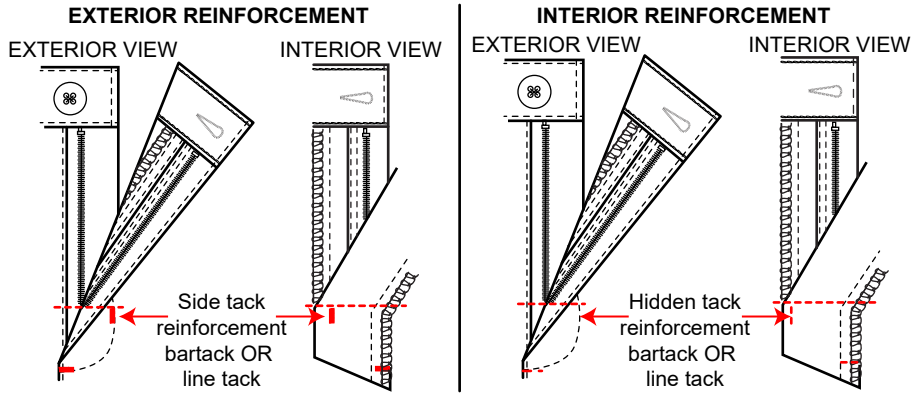


TACKS must be sewn on 28 stitch tacking machine either set to bartack (zig-zag) or line tack (straight) configuration.

**IMAGE 16: FLY - CORD STITCH, ZIPPER GAP**

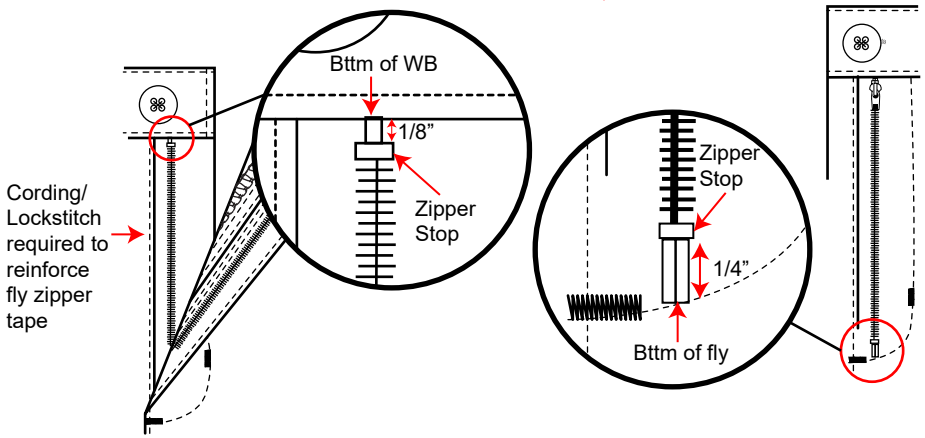


Revised Date: 10/23/2026


CONFIDENTIALITY NOTICE: This document is property of Kohl's Inc.

## CONSTRUCTION REQUIREMENTS CONT.

### CROTCH GUSSETS KNIT TIGHT FITTING / COMPRESSION GARMENTS:

- Crotch Gussets must be 2 plies
- Gusset must be seamed using ISO 607 Flatseaming (IMAGE 16.1)

### IMAGE 16.1: CROTCH GUSSET PLIES

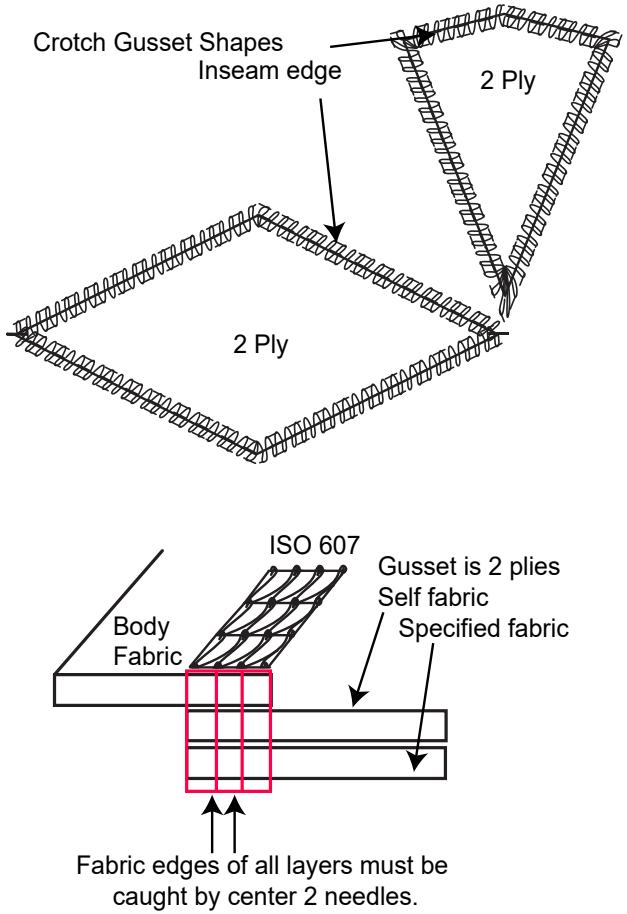



CONFIDENTIALITY NOTICE: This document is property of Kohl's Inc.

# CONSTRUCTION REQUIREMENTS CONT.

## WAISTBAND WOVEN & KNIT:

- Must be **folder set** if not a fold over waistband or as specified.
- **Top stitch with chainstitch (ISO 401)** ends must be secured with a lockstitch (ISO 301) 1/8"-1/4" stitch or bartack.
- **Half back elastic** must be clean finished on inside waistband at side seam.

## ADJUSTABLE CHILDREN'S WAISTBAND:

- **Adjustable elastic:** Must be secured to inside waistband at CB.
  - If main label is sewn to inside waistband, use label stitching to secure elastic to inside WB.
  - If main label is screen print/embroidery on inside WB, tack elastic between letters or to side of print/embroidery as specified.
  - Tack length = elastic width.
  - Finished elastic length should allow 1st buttonhole of elastic to be buttoned w/o gathering WB or excess ease in elastic. (IMAGE 17)

## LININGS WOVEN & KNIT:

- **Tops:** Linings must be secured at shoulder seam, underarm, and hood (if applicable) with a tack.
- **Bottoms:** Lining must be secured at crotch point with a tack. Linings must be secured above hem at inseam/outseam with a tack.

## IMAGE 17: ADJUSTABLE ELASTIC - TACK AT CB

***Button attachment: Reference Children's Safety Standards for required attachment

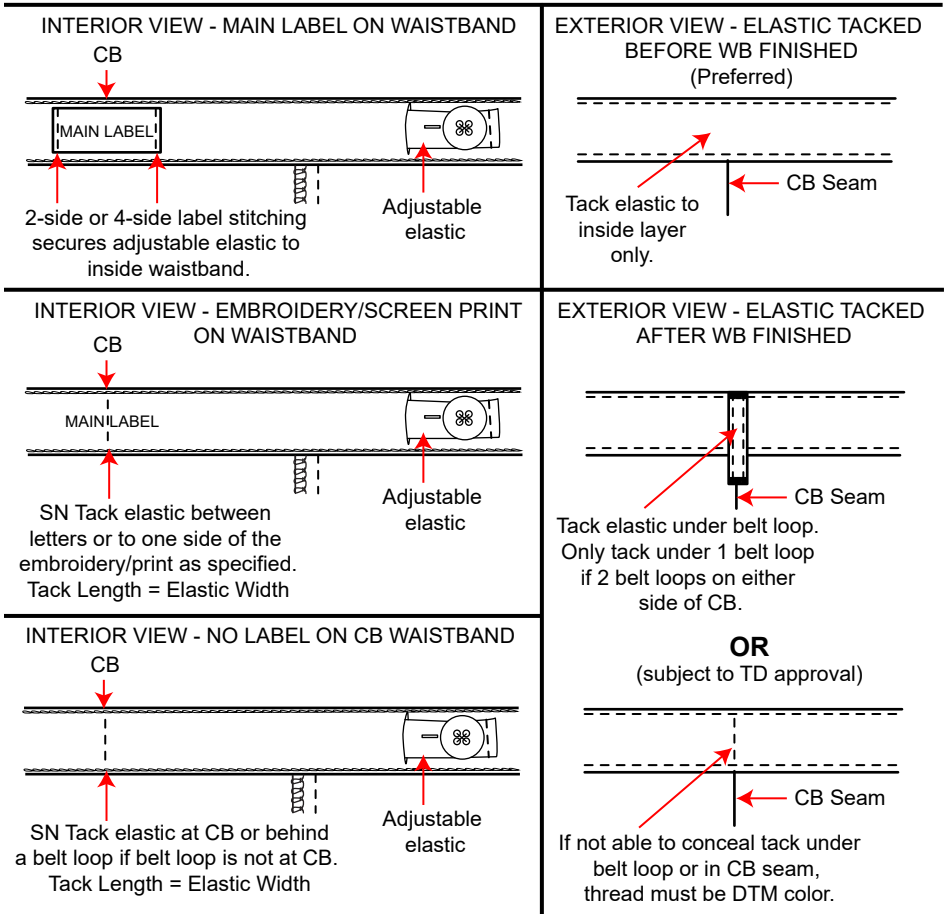

# CONSTRUCTION REQUIREMENTS CONT.

## BINDING ON NEWBORN/INFANT OPENINGS:

- Binding width for snaps: Inside edge of binding is 1/16” wider than outside edge so snaps are set on an even surface. (IMAGE 18)
- Side seams on body suits at back leg opening are line tacked toward the back.
- Must reference Children’s Safety Standards for proper snap application requirements.

**IMAGE 18: BINDING WIDTH FOR SNAP PLACKETS**

CROSS-SECTION OF BINDING/SNAP PLACKET

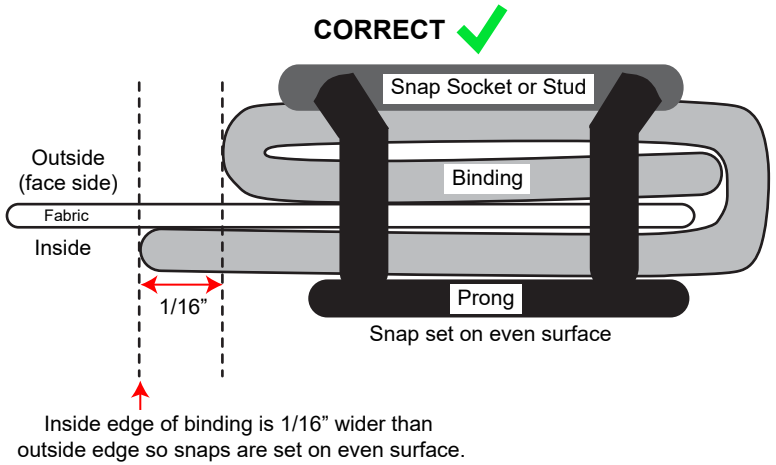


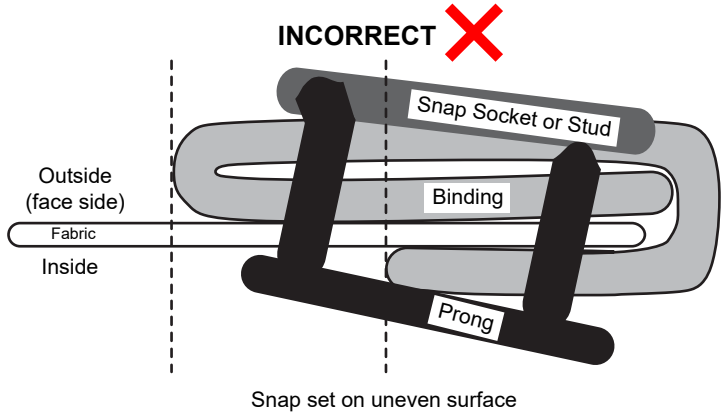

# SECTION 5: TRIMS/FINDINGS

## INTERLINING, ELASTIC, THREAD, BUTTON, METAL FASTENERS & ZIPPER SUPPLIERS:

- Preferred suppliers must be used for zippers, buttons, elastic, thread and interlining. Any other trim types can be a non-preferred supplier but must go through 3rd party testing.

## INTERNAL COMPONENT TRIM COLOR:

(Elastic, interlining, reinforcement tape, shoulder pads, etc.)

- White for light colors, Black or Gray for dark colors.

## HEAT CUT EDGES:

- No “hot wire” heat cut edges against skin.
- Heat cut ends are permitted if they are enclosed.
- Heat sonic edges are subject to approval.

## ELASTIC:

- **Full Elastic** openings must be set circular. Lapped join seam at CB/Underarm.
- **Tunnel Elastic** must be vertically tacked to tunnel at CB/Underarm (or other location as specified) to prevent twisting of elastic inside tunnel.
- **Exposed Elastic:** rubber/latex should never be used in exposed elastic.
- **Adjustable Elastic:** See (IMAGE 17, PAGE 20)


CONFIDENTIALITY NOTICE: This document is property of Kohl’s Inc.

# TRIMS/FINDINGS CONT.

## ZIPPERS:

- Zippers with metal claw top/bottom stops are ONLY allowed if stops are not exposed.

### TOPS:

- Allow 1/8” gap between both top and bottom of garment edges and top and bottom of zipper, unless otherwise specified on DI page.
- All **metal zippers** for tops and outerwear at center front must have auto lock sliders.
- All **coil zippers** for tops and outerwear at center front must have auto lock or semi-auto lock sliders.

### BOTTOMS:

- All **metal zippers** for bottoms at waist opening must have auto lock or semi-auto lock sliders.
- All **coil zippers** for bottoms at waist opening must have auto lock sliders.

### SEPARATING ZIPPERS:

- CF Opening must be Left Hand Insert/pin, Right Hand Pull/slider.
- Reinforce zipper box/pin with line tack or bartack sewn on a 28-stitch tacking machine. (IMAGE 19)
- #3 Coil Zippers are restricted - see Apparel Product Safety and Regulatory Standards on K-Link for garment restrictions.

### INVISIBLE ZIPPERS:

- All invisible zippers must be sewn into the garment with the supplier provided invisible zipper foot.

## IMAGE 19: SEPARATING ZIPPER - REINFORCEMENT

- Diagrams are examples ONLY, follow Design Intent for actual zipper construction.
- Tacks must be sew on 28-stitch tacking machine either set to bartack (zig-zag) or line tack (straight) configuration.
- Sewing tacks on SN lockstitch machine w/ backstitch is not acceptable tacking method.

**COVERED SEPARATING ZIPPER W/ FOLD OVER HEM**

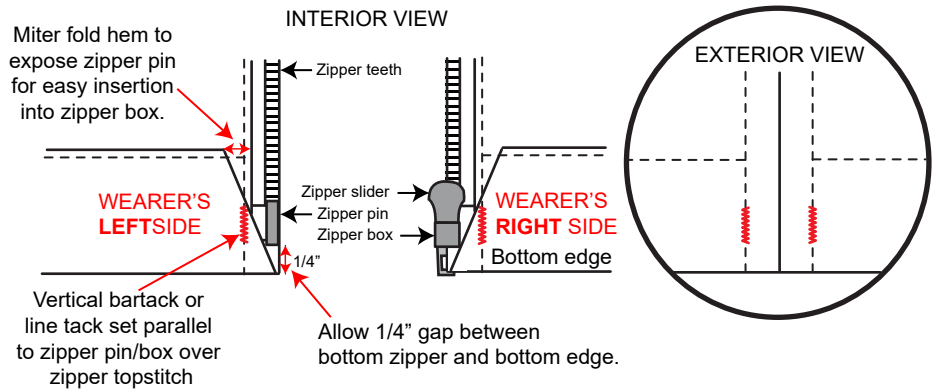


**EXPOSED SEPARATING ZIPPER W/ TAPED EDGES**

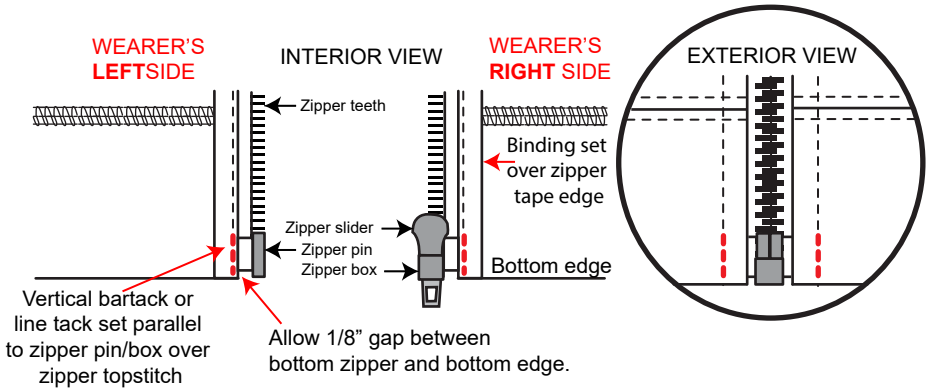

## TRIMS/FINDINGS CONT.

### CLOSURES:

- **Snaps/Buttons/Buttonholes** must be evenly spaced and centered on the width of plackets, cuffs, and waistbands.
- **Snaps/Buttons/Buttonholes/Grommets** must be reinforced on single plies of fabric. Reinforcements must be uniform size and shape throughout garment.
- **Buttonholes** on single ply fabric for drawstrings must have interlining backing. **All functional buttonholes must be on 2 plies of fabric.**
- **Decorative buttons or functional buttons** must be attached with a lock stitch button sew machine.
- **Shankless buttons** must be sewn with shank height suitable for fabric thickness. (IMAGE 20)
- **4-hole buttons** must be set with a minimum of 16 stitches.
- **2-hole buttons** must be set with a minimum of 8 stitches.
- **Shank buttons** must be set with a minimum of 8 stitches (vertically). (IMAGE 21)
- **Wrapped shank buttons** must be set with a minimum of 8 stitches (vertically) and 8 revolutions (horizontal wrapped). (IMAGE 21)
- **Buttonholes** recommended minimum of 108 stitches (ISO 304/404).
- **Keyhole buttonholes** when specified must always have gimp cord and overlap finish unless bartack finish is specified.

### IMAGE 20: SHANK HEIGHT REQUIREMENTS

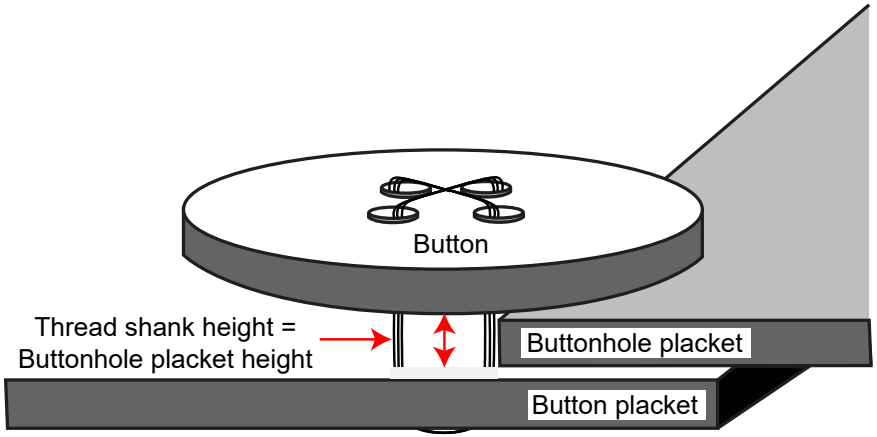


### IMAGE 21: SHANK BUTTON SEWING REQUIREMENTS

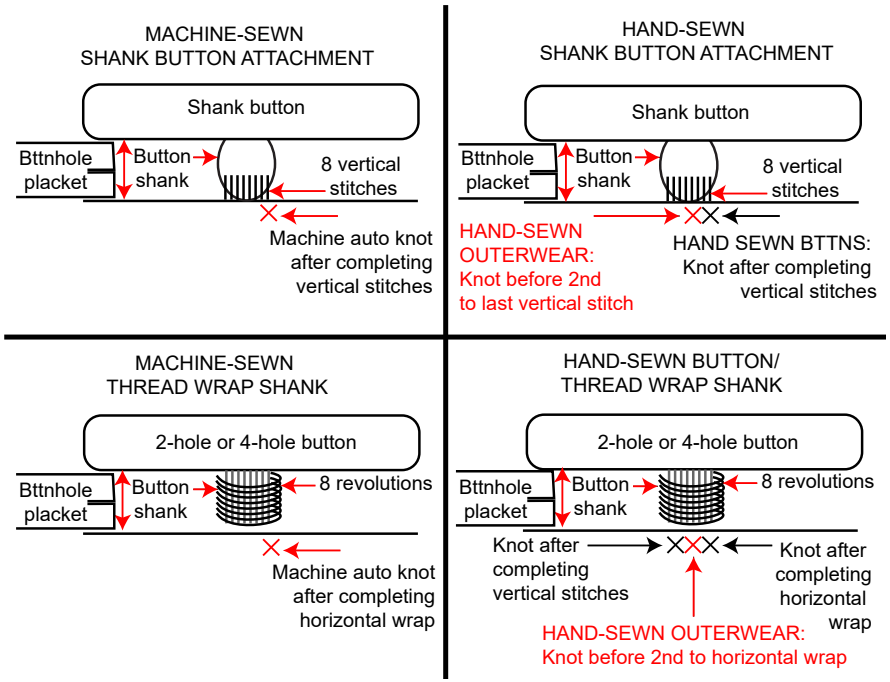


Revised Date: 10/23/2026


CONFIDENTIALITY NOTICE: This document is property of Kohl's Inc.

## TRIMS/FINDINGS CONT.

### CLOSURES:

- **Extra buttons** if required, attach 1 extra button per ligne in specific location.
- **CF hook & slide bar:** Hook centered on inside waistband 1/4" from edge. Slide bar centered on waistband, aligned with hook. Must be machine tacked, not sewn. All hook and bar closures must include interior button/buttonhole closure to relieve stress on the hook & bar. (IMAGE 22)
- **Hook & eye:** Set evenly from side to side 1/8" from top edge. Hook at WR, eye at WL. Securely stitch hook and across the loop to hold in place. The first stitches should go around the hook itself. The needle should never come through the top layer of the garment. Thread ends must be secure. (IMAGE 23)

### IMAGE 22: CF HOOK & SLIDE BAR PLACEMENT

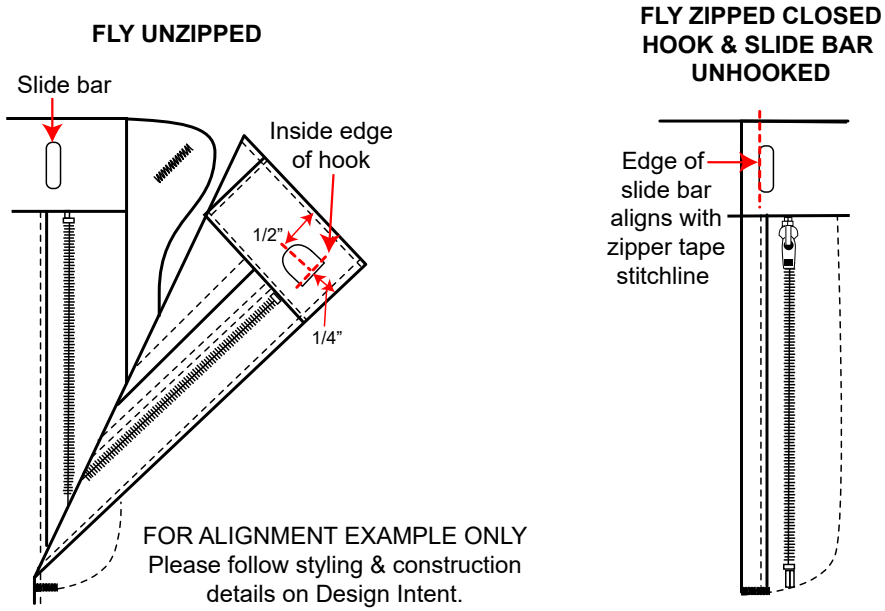


### IMAGE 23: HOOK & EYE PLACEMENT

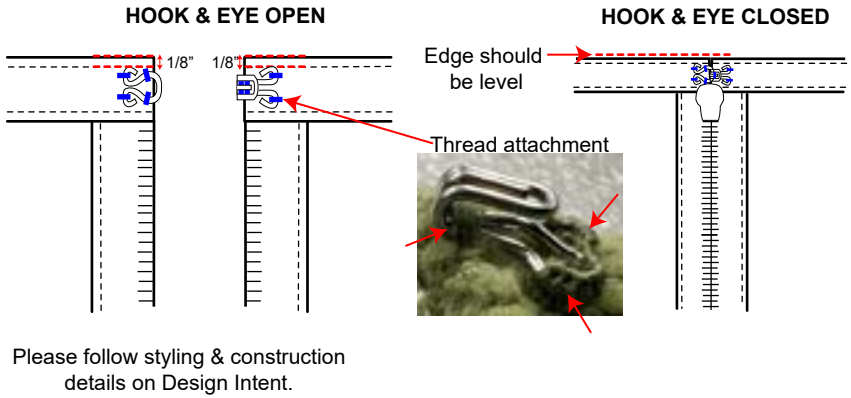

# TRIMS/FINDINGS CONT.

## BUNGEE/ELASTIC DRAWCORDS:

- **Drawcord ends sewn into seams:** Cut end must be wrapped in fabric and tacked to cord 1/2” from cut end in two places, 1/4” apart. Only fabric is sewn into seam.
- **Circular/Continuous drawcords:** Overlap cut ends 1 1/4”. Wrap fabric around cut ends. Tack fabric to cord in two places 1/4” apart, 1/2” from cut ends. (IMAGE 24)

## INTERLINING WOVEN & KNIT:

- Hand ironing is not acceptable.

## ADDITIONAL WOVEN INTERLINING:

- **Belt Loops:** Interlining is required.
- **Waistbands:** Interlining is required on fabric less than 10 oz.

### IMAGE 24: BUNGEE-ELASTIC DRAWCORDS

**CIRCULAR TACK:**
- Overlap bungee ends 1 1/4”
- Wrap ends of bungee cord with fabric
- Tack fabric to bungee cord
- (2) tacks 1/4” apart and at least 1/2” from cut end of bungee cord

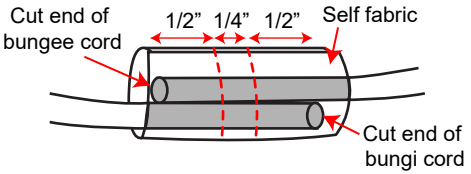


**NON-CIRCULAR TACK:**
- Wrap ends of bungee cord with fabric no longer than 1”
- Tack fabric to bungee cord
- (2) tacks 1/4” apart and at least 1/2” from cut end of bungee cord
- Sew fabric end into seam

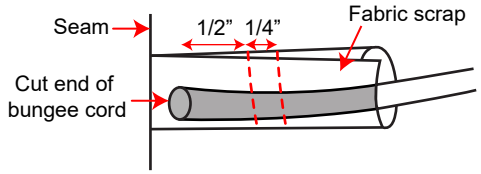


**NON-CIRCULAR TACK TO FACING:**
- Tack bungee cord to front facing/ seam allowance
- (2) tacks 1/4” apart and at least 1/2” from cut end of bungee cord

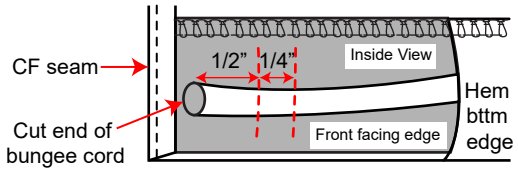



CONFIDENTIALITY NOTICE: This document is property of Kohl’s Inc.

# TRIMS/FINDINGS CONT.

## PADDING: SCRIM REQUIREMENTS

- Scrim must be light weight enough not to affect the hand or stiffness of the padding but heavy enough to withstand 3 launderings without shredding.

**NO SCRIM APPLICATION - TESTING FOR FIBER PERCOLATION & FIBER MIGRATION PASSES** (IMAGE 25)

Styling Application:
- Shell/lining fabric thread count >/= 190T or has coating applied
- Non-garment washed
- Shell or lining is quilted to padding (not free hanging padding)

**SCRIM APPLIED TO PREVENT PADDING FIBER PERCOLATION THROUGH LINING FABRIC** (IMAGE 26)

Stying Application:
- Woven nylon/polyester lining < 190T thread count
- Fleece, knit or cotton linings with low thread count
- Note if shell fabric is also low thread count and is also non-coated, may also need to apply scrim layer between padding and shell fabric.
- Needle punch, bonded, or hot plate surface finish padding may be exempt from scrim if mock-up passes 3 launderings without fibers entangling or percolating through shell or lining.

## IMAGE 25: PADDING SCRIM REQUIREMENTS

**CROSS-SECTION OF:**
NO SCRIM APPLICATION - TESTING FOR
FIBER PERCOLATION & FIBER MIGRATION PASSES

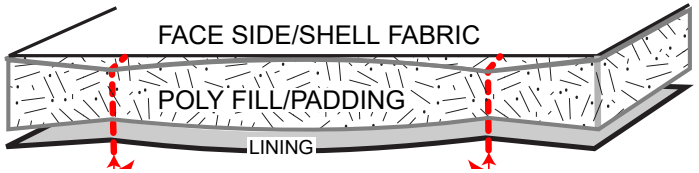


## IMAGE 26: PADDING SCRIM REQUIREMENTS

**CROSS-SECTION OF:**
SCRIM APPLIED TO PREVENT PADDING
FIBER PERCOLATION THROUGH LINING FABRIC

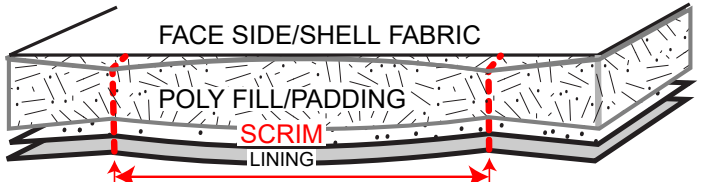



CONFIDENTIALITY NOTICE: This document is property of Kohl's Inc.

# TRIMS/FINDINGS CONT.

## PADDING: SCRIM REQUIREMENTS

### SCRIM APPLIED TO PREVENT PADDING FIBER MIGRATION (IMAGE 27)

Styling Application:

- Garment washed/tumbled outerwear
- Light weight/unstable polyfill
- Needle punch, bonded, or hot plate surface finish padding may be exempt from scrim if mock-up passes 3 launderings without fibers clumping/shredding.

### SCRIM APPLIED TO PREVENT PADDING FIBER MIGRATION (IMAGE 28)

Styling Application:

- Garment with non-quilted or free hanging shell/lining
- Provide stability to polyfill so that it stays in place inside of garment.

### IMAGE 27: PADDING SCRIM REQUIREMENTS

**CROSS-SECTION OF:**
SCRIM APPLIED TO PREVENT PADDING FIBER MIGRATION

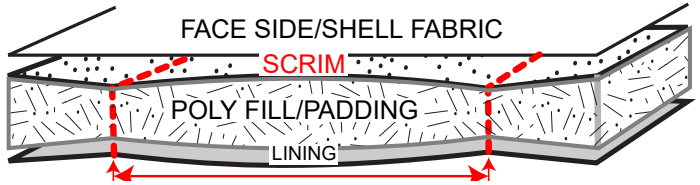


### IMAGE 28: PADDING SCRIM REQUIREMENTS

**CROSS-SECTION OF:**
SCRIM APPLIED TO PREVENT PADDING FIBER MIGRATION

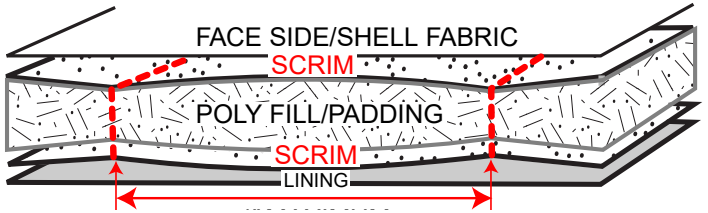



CONFIDENTIALITY NOTICE: This document is property of Kohl's Inc.

# TRIMS/FINDINGS CONT.

## EMBROIDERY:

- All embroidery must have suitable tear away or dissolvable backing and must be removed after application.
- Embroidery thread must be polyester unless otherwise specified.

## OVER THE BACK EMBROIDERY COVER:

- Must use **Vilene PD9333 / Chargeurs 2200/2201** with fusing machines or **Vilene PE9924 / Chargeurs 2209** with hand irons.
- **PCC CT6116** can be used with fusing machine or hand iron.
- Fusible testing must be conducted by vendor through Chargeurs, PCC, or Vilene prior to production to ensure appropriate application.

## BEADING & SEQUINS:

- Must be knotted every 1” with thread floats no longer than 1”.
- **Children’s 0-4T** thread floats can be no longer than 3/8”.
- **Children’s 4-20** thread floats can be no longer than 1/2”.
- Longer float lengths are subject to TD approval if garment is lined or backed with an appropriate fusible over the back cover.


CONFIDENTIALITY NOTICE: This document is property of Kohl’s Inc.

# SECTION 6: CUTTING

## CUT PART MARKING: (IMAGE 29)

- All use of disappearing Magic Pens/Markers are prohibited without exception for any Kohl's product.
- Allowed alternatives to Magic Pens/Markers include water soluble chalk or templates.
- Magic Pens/Markers used to mark the position of cut parts for accurate sewing temporarily disappear with steaming, pressing and/or washing, only to reappear when subjected to freezing temperatures, rendering the product defective during transit from the factory.

## CUTTING DIRECTION:

- All components within the garment and multiple garments sold together as a set are cut in same direction.

## NAPPED FABRICS:

- **2-way cut:** All components within a garment and multiple garments sold together as a set are cut in same direction.
- **1-way cut:** All components cut in same direction for Top/Bottom sets sold as separates.

## UNEVEN PLAIDS & STRIPES:

**2-way cut:** All parts cut in same direction within a garment.

## IMAGE 29: MAGIC PENS/MARKERS PROHIBITED

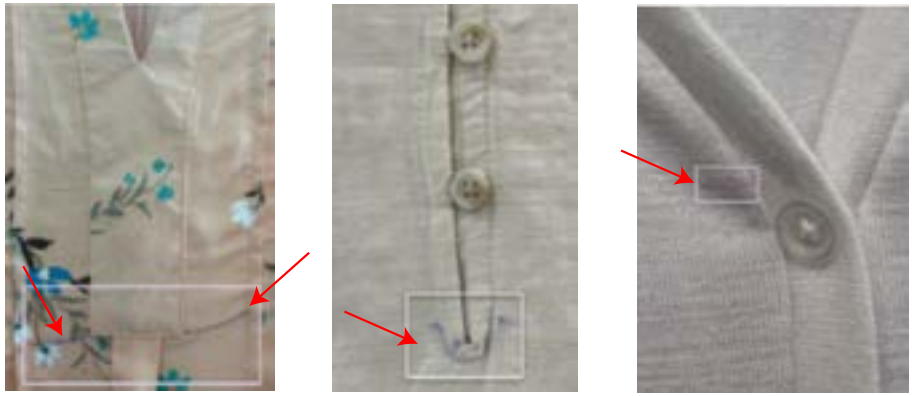

**ALL USE OF DISAPPEARING MAGIC PENS/MARKERS ARE PROHIBITED WITHOUT EXCEPTION FOR ANY KOHL'S PRODUCT.**

# CUTTING CONT.

## 1-WAY PRINTS:

- Cut entire quantity in same direction.

## WOVEN INTERLINING:

- **Single ply collars:** Cut woven interlining on 45 degree bias.
- **Two ply collars:** Cut full collar interlining on 45 degree bias. Cut patch interlining on straight (warp grain).
- **Collar stands:** Cut woven interlining on 9 degree bias.

**Cuffs, center plackets, small parts:** Cut woven interlining on straight (warp) grain.

## 1-WAY PRINTS:

- Cut entire quantity in same direction.

## WOVEN INTERLINING:

- **Single ply collars:** Cut woven interlining on 45 degree bias.
- **Two ply collars:** Cut full collar interlining on 45 degree bias. Cut patch interlining on straight (warp grain).
- **Collar stands:** Cut woven interlining on 9 degree bias.
- **Cuffs, center plackets, small parts:** Cut woven interlining on straight (warp) grain.


CONFIDENTIALITY NOTICE: This document is property of Kohl's Inc.